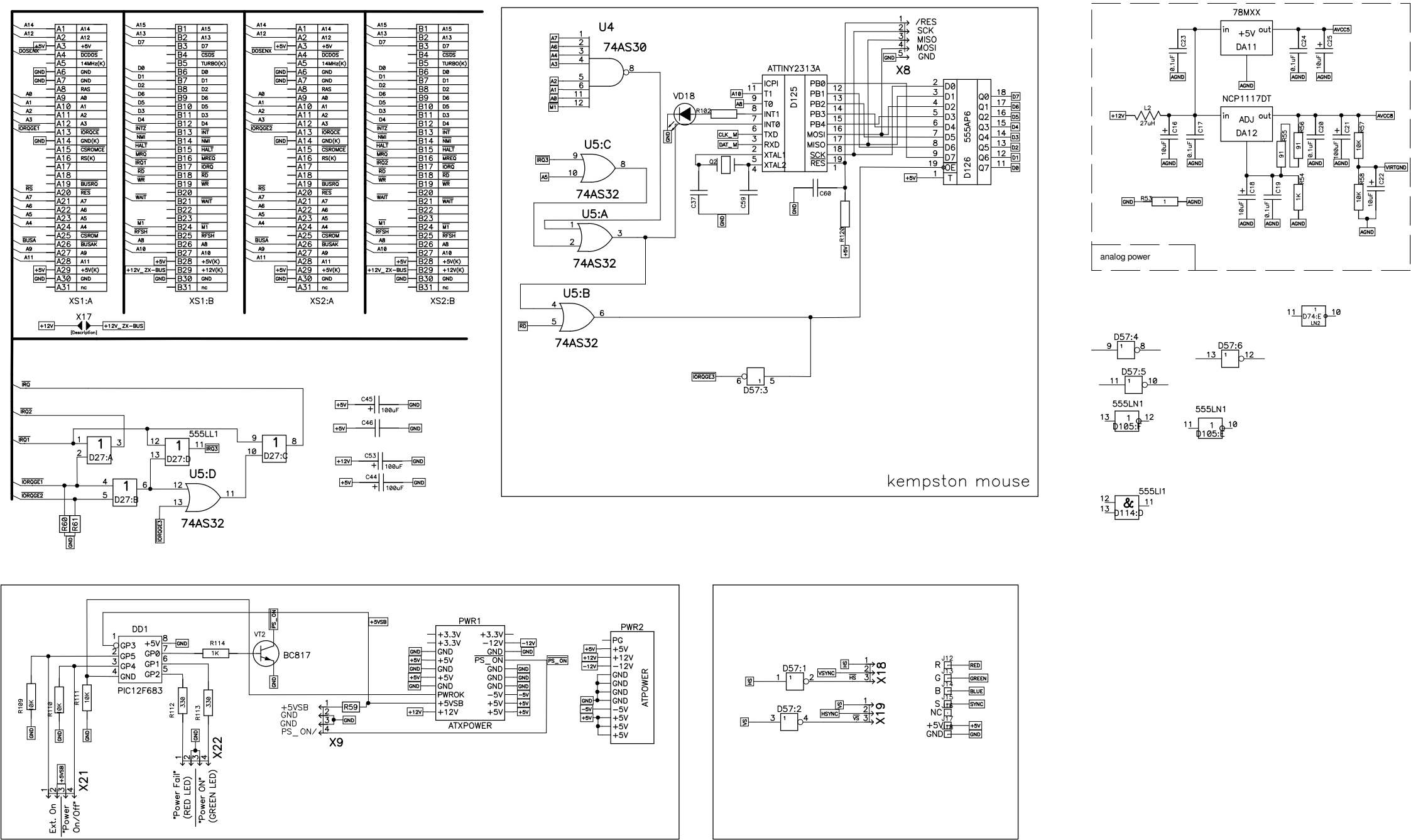
XS1:A
XS1:B
XS2:A
XS2:B
X17
U4
74AS30
U5:C
74AS32
U5:A
74AS32
U5:B
74AS32
U5:D
74AS32
555LL1
D27:A
D27:B
D27:C
D27:D
ATTINY2313A
D125
555AP6
D126
X8
VD18
D57:3
kempston mouse
78MXX
DA11
NCP1117DT
DA12
analog power
D57:4
D57:5
D57:6
555LN1
D105:F
D105:E
D74:E
555LI1
D114:D
PIC12F683
DD1
BC817
VT2
PWR1
ATXPOWER
PWR2
ATPOWER
X9
X21
X22
"Power Fail" (RED LED)
"Power ON" (GREEN LED)
Ext. On
"Power On/Off"
D57:1
D57:2
X18
X19
VSYNC
HSYNC
RED
GREEN
BLUE
SYNC